Korea Technology and Information Promotion Agency for SMEs

(max 10 pages)

Technology Proposal for 2026 TIPA* International Joint R&D Program

(TIPA: Korea Technology and Information Promotion Agency for SMEs)

The objective of this Technology Proposal is to introduce the institute's proprietary technologies and present potential collaborative areas for Korean SMEs, facilitating joint research and development projects under the 2026 TIPA International Joint R&D Program. This Technology Proposal will be publicly disclosed in conjunction with the official announcement of the 2026 TIPA International Joint R&D Program.

1. Technology Proposer Information

Proposer	Name	Woongkul Lee	Email	coria-consortium@purdue.edu
Institute Name	Purdue University			
Address	516 Northwestern Ave. West Lafayette, Indiana 47907-2035			

2. Technology Overview

Title of Proposed Technology	**Power-signal monolithically integrated isolated gate driver for next-gen power semiconductors**			
Korea's 12 National Strategic Technology Fields	Semiconductor/Display (√), Secondary Battery ( ), Advanced Mobility ( ), Next-gen Nuclear Power ( ), Advanced Bio ( ), Aerospace/Marine ( ), Hydrogen ( ), Cybersecurity ( ), AI ( ), Next-gen Communication ( ), Advanced Robotics & Manufacturing ( ), Quantum ( )			
Industrial Technology Classification [1)]	**Technology Field 1** (Large Category)		**Technology Field 2** (Large Category)	
	Electrical / Electronics			
	Medium Category	Small Category	Medium Category	Small Category
	Semiconductor Devices and Systems	*SoC*		
Concept of Proposed Technology	**Core Concept** The proposed technology is a monolithically integrated isolated gate driver architecture for next-generation SiC, GaN, and ultra-wide bandgap (UWBG) power devices, targeting medium- to high-voltage power electronics applications. Unlike conventional discrete gate drivers, which separately implement signal transmission, isolated power delivery, and protection functions, this technology co-designs signal, power, and insulation interfaces as a unified system. The architecture integrates gate signal transmission and isolated power delivery through shared coupling structures (e.g., magnetic isolation), enabling compact, high-speed, and noise-resilient operation under extreme dv/dt conditions. **Key Functions and Potential Applications** The technology is designed to be monolithically integrated (on-chip) or co-packaged isolated gate driver where both power and signal transmissions are integrated for WBG power devices,			

significantly reducing parasitic inductance, timing skew, EMI sensitivity, and insulation stress. Potential applications include SiC/GaN power modules, solid-state transformers, MV converters, EV traction inverters, aerospace and naval power systems, and other high-performance power electronics platforms.

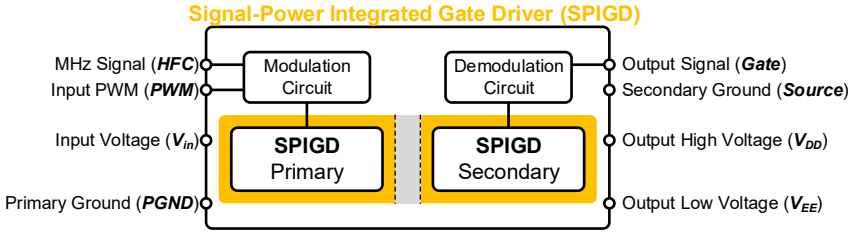

Rationale for Joint R&D Project

Critical Technical Barriers

The proposed joint R&D is strategically aligned with the capabilities of Korean SMEs that possess established gate driver IC design businesses and manufacturing experience, while addressing a critical gap in next generation integrated gate driver technology for wide bandgap power devices.

Signal and power integrated isolated gate drivers represent an emerging and rapidly growing market segment, driven by increasing switching speed, dv/dt, and integration demands in SiC and GaN power electronics. Recent industry activity, including the acquisition of a French startup (i.e., Heyday) by a major gate driver company (i.e., Allegro), demonstrates strong commercial interest in integrated isolated gate driver concepts. However, most existing solutions rely on flip flop-based signal transmission schemes, which are inherently vulnerable to electromagnetic noise, timing uncertainty, and signal corruption in high dv/dt environments. These limitations become increasingly severe as devices scale toward higher voltage, higher frequency, and tighter integration.

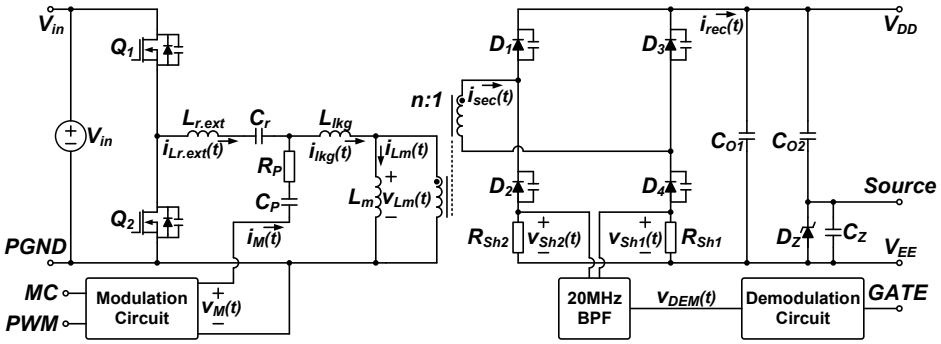

Why Global Collaboration?

Purdue University has developed a latch-based signal and power integrated gate driver architecture that fundamentally addresses these limitations by ensuring deterministic gate state retention and improved noise immunity under extreme switching conditions. While this architecture has been validated at the circuit and system level, it has not yet been implemented as a monolithic on-chip solution due to the lack of in-house semiconductor IC fabrication and productization infrastructure.

Through this joint R&D, Purdue's latch-based signal-power integrated gate driver architecture will be combined with the Korean SME partner's gate driver IC design, semiconductor fabrication, and

	advanced packaging expertise. This collaboration enables the realization of a unique monolithic on-chip integrated gate driver that is differentiated from existing commercial solutions by its inherent noise robustness, scalability, and suitability for next-generation wide bandgap power devices. The joint effort will not only advance integrated gate driver technology but also establish a distinct intellectual property and commercialization pathway for Korean SMEs in a rapidly emerging global market.
Key Words	1. Integrated isolated gate driver 2. Wide bandgap (SiC and GaN) devices 3. On-chip / co-packaged gate driver 4. Signal-power integration 5. High dv/dt power electronics

3. Research and Development Objectives & Plan

<table>
<tr><td>Technology Readiness Level (TRL)[2)]</td><td>Start of the Project</td><td>Level (3)</td><td>End of the Project</td><td>Level (6)</td></tr>
<tr><td>R&D Objectives</td><td colspan="4">● Develop a signal-power integrated isolated gate driver architecture suitable for on-chip or co-packaged implementation with WBG devices
● Establish signal–power–insulation co-design methodologies for high dv/dt environments
● Design and demonstrate high-speed, low-noise gate driver prototypes compatible with SiC/GaN devices
● Validate performance improvements in switching speed, EMI robustness, and insulation stress reduction</td></tr>
<tr><td>R&D Target Specifications</td><td colspan="4">● Target device compatibility: 650 V–1.7 kV SiC/GaN devices
● dv/dt tolerance: ≥100–150 kV/μs
● Full modulation index from 0 to 100%
● Isolated power transfer efficiency: ≥80% (gate driver domain)
● Footprint reduction: ≥30% compared to discrete gate driver solutions
<table><tr><th>Key Performance Indicator</th><th>Target Value</th></tr><tr><td>Target device compatibility</td><td>650 V–1.7 kV SiC/GaN devices</td></tr><tr><td>dv/dt tolerance</td><td>≥ 100–150 kV/μs</td></tr><tr><td>Full modulation index</td><td>0 - 100%</td></tr><tr><td>Isolated power transfer efficiency</td><td>≥ 80% (gate driver domain)</td></tr><tr><td>Footprint reduction</td><td>≥30% compared to discrete gate driver solutions</td></tr></table></td></tr>
<tr><td>R&D Plan</td><td colspan="4">Phase 1 (Year 1): Architecture & Modeling
● Multi-physics modeling of signal, power, and insulation coupling
● Definition of integrated gate driver architecture and isolation strategy
● Simulation-based validation

Phase 2 (Year 2): Prototype Design & Fabrication
● IC-level or co-packaged gate driver design
● Fabrication and assembly with WBG devices
● Bench-level electrical characterization

Phase 3 (Year 3): System-Level Validation
● Integration into WBG power converter prototypes
● EMI, switching performance, and reliability testing
● Design-for-manufacturing and commercialization roadmap</td></tr>
</table>

4. R&R (Roles and Responsibilities)

Expected R&R of Research Institute	● Integrated and isolated driver architecture development ● Multi-domain modeling (signal, power, insulation, EMI) ● Control and modulation strategy development ● Experimental validation and performance benchmarking ● Joint technical leadership and IP generation
Expected R&R of Korean SME Partner	● IC design, layout, and semiconductor fabrication ● Advanced packaging and co-integration with WBG devices ● Reliability testing and qualification ● Manufacturing feasibility and cost analysis ● Commercialization and market deployment

5. Expected Outcomes/Impact

Expected Outcomes and Impact	This joint R&D project will deliver a next-generation integrated gate driver building block that enhances performance, reliability, and scalability of WBG-based power electronics. Expected impacts include: ● Technological: Breakthrough gate driver architectures enabling faster, cleaner switching with compact form factor enabling high power density power electronics design ● Industrial: Competitive Korean SME products in WBG gate driver and power module markets, which is increasingly more important in the electrification and data center applications ● Economic: Reduced system cost and improved yield through integration ● Strategic: Strengthened Korean leadership in advanced semiconductor and power electronics technologies

6. References

(1) C. Jiang, H. Peng, O. Yue and Q. Tong, "Study on the Impacts of Signal Carrier in a Compact Gate Driver with Single Isolation Channel for Both Signal and Power Transferring," *2022 IEEE Energy Conversion Congress and Exposition (ECCE)*, Detroit, MI, USA, 2022, pp. 1-7.

(2) J. Garcia, E. Gurpinar and A. Castellazzi, "High-frequency modulated secondary-side self-powered isolated gate driver for full range PWM operation of SiC power MOSFETs," *2017 IEEE Applied Power Electronics Conference and Exposition (APEC)*, Tampa, FL, USA, 2017, pp. 919-924.

(3) J. Garcia, E. Gurpinar and A. Castellazzi, "Impulse transformer based secondary-side self-powered gate-driver for wide-range PWM operation of SiC power MOSFETs," *2016 IEEE 4th Workshop on Wide Bandgap Power Devices and Applications (WiPDA)*, Fayetteville, AR, USA, 2016, pp. 59-63.

(4) T. V. Nguyen, P. -O. Jeannin, J. -C. Crebier and J. -L. Schanen, "A new compact, isolated and integrated gate driver using high frequency transformer for interleaved Boost converter," *2011 IEEE Energy Conversion Congress and Exposition*, Phoenix, AZ, USA, 2011, pp. 1889-1896.

(5) Q. Yue, H. Peng, Q. Tong and Y. Kang, "A Novel Isolated Resonant Gate Driver With Adjustable Duty Ratio for SiC MOSFET," in *IEEE Journal of Emerging and Selected Topics in Power Electronics*, vol. 10, no. 6, pp. 7162-7176, Dec. 2022.